TENGXUAN TECHNOLOGY

Txuan

造纸行业

GS/GSM/QGX/SN/SC/QQ/BE型旋转接头
虹吸器/扰流器/视镜/金属软管

ROTARY JOINTS

Paper Industry Products
GS/GSM/QGX/SN/SC/QQ/BE
SYPHONS/TURBULATOR BARS
SIGHT FLOW INDICATORS/HOSES

江苏腾旋科技股份有限公司
TENGXUAN TECHNOLOGY CO., LTD.

腾旋科技是研制、开发和生产旋转接头及其相关产品的高新技术企业。公司长期致力于密封与磨擦技术的研究，在旋转接头领域处于国内领先地位。旋转接头研发中心已为腾旋公司赢得了203项专利。

公司拥有加工中心、数控车床及其它专业设备110余台套。严格按照IS09001质量规范组织生产、销售、服务等业务。产品已在造纸、钢铁、瓦楞、纺织、印染、橡塑、化工、工程机械和机床等行业得到广泛应用。

我们不仅提供优质的产品，更提供无时不在的精诚服务；我们不仅提供技术支持，更提供行业的整体解决方案。

Tengxuan Technology Company specializes in research, development and the manufacturing of rotary joints and related products. Tengxuan is also the leading sealing technology and steam syphon expert in China, accumulating 203 technical patents over the years. Tengxuan has a large machine shop facility, with over 110 state-of-the-art machines. Our products are manufactured to ISO9001 quality management standards. We have our own sales and service staff, assisting customers around the world. Tengxuan products are widely used in industries such as paper, steel, corrugating, textiles, non-wovens, rubber, plastics, chemical,machine tool, construction machinery and food processing.
Along with our high quality products, we offer our customers the highest level of aftermarket sales and service.

适用行业 Industries

• 造纸及纸制品行业	• Paper and Paper Converting
• 钢铁行业	• Steel
• 瓦楞行业	• Corrugating
• 机床行业	• Machine Tool
• 印刷行业	• Printing
• 塑料行业	• Plastics
• 食品加工行业	• Food Processing
• 纺织行业	• Textiles
• 无纺布行业	• Non-wovens
• 化工行业	• Chemical
• 橡胶行业	• Rubber
• 工程机械行业	• construction machinery

精心设计、精工制造
国际品质、国内价格
完善的技术支持
快捷的售后服务
提供维护保养培训
提供低成本配件及维修服务
提供现场指导安装、调试服务

Design and manufacturing capabilities
In-house and field technical support
Maintenance training
Installation guidance and trouble shooting

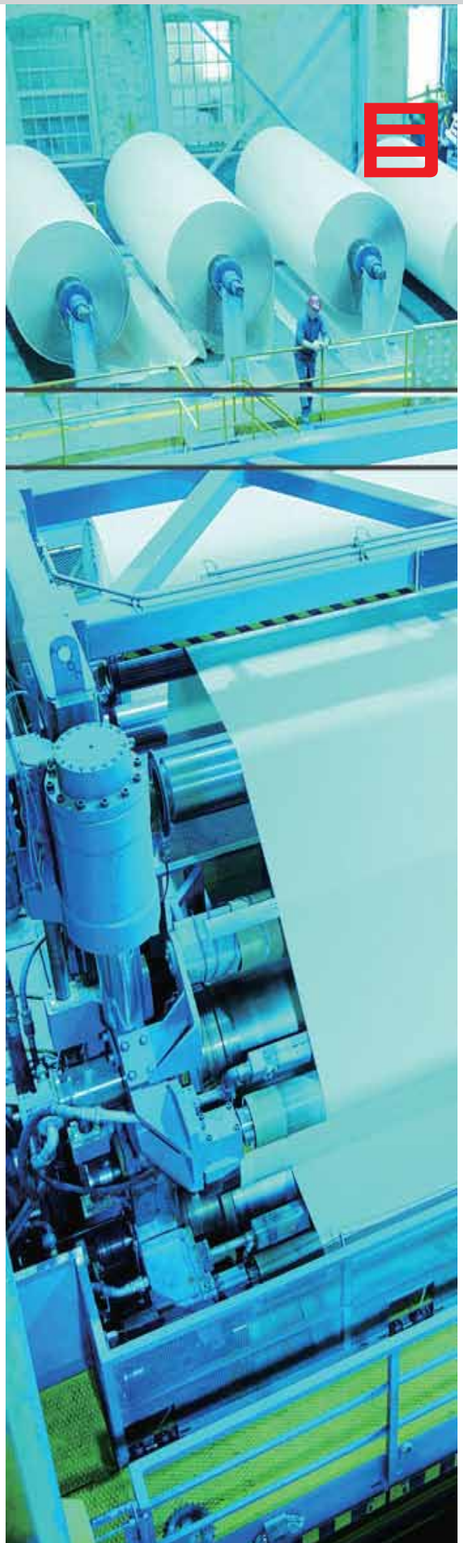

目录 Content

GS / HCSS 旋转接头/虹吸器 GS / HCSS Rotary Joints & Syphons 3-4
QGX / CSS 旋转接头/虹吸器 QGX / CSS Rotary Joints & Syphons 5-6
SN 型旋转接头 SN Rotary Joints 7-8
SC 型旋转接头 SC Rotary Joints 9-10
QQ 型旋转接头 QQ Rotary Joints 11
GSM 型旋转接头 GSM Rotary Joints 12
BE 型旋转接头 BE Rotary Joints 13-15
配件 Accessories 16-17
应用 Application 18

快速选型表
Quick Selection Chart

型号 Type	适用介质 Media				最高压力 Pressure (Max.)		最高温度 Temperature (Max.)		最高转速 Speed (RPM)
	蒸汽 Steam	空气 Air	导热油 Oil	水 Water	BAR	PSI	°C	°F	
GS	●	●	●	●	18	260	235	455	2500MPM /8202FPM
QGX	●	●	●	●	11	160	235	455	800MPM /2625FPM
SN	●	●	●	●	20	300	280	536	200
SC	●	●	●	●	32	464	280	536	250
QQ	●	●	●	●	18	260	355	671	350
GSM	●	●	●	●	18	260	235	455	2500MPM /8202FPM
BE	●	●	●	●	15	217	120	248	3000

● 推荐 Recommended
● 不推荐 Not Recommended

1. 请咨询腾旋科技具体细节.
   Consult Tengxuan Technology for specific details.
2. 对于特定的应用参数，见目录页.
   需要更高的车度和压力时，请咨询腾旋科技.
   For specific application parameters, see catalog page.
   Consult Tengxuan Technology for applications requiring increased speeds and pressures.
3. 不要在压力，温度和车速同时最高的情况下使用旋转接头。
   Do not operate Rotary Joints at maximum pressure, temperature and speed simultaneously.

GS/HCSS

旋转接头/重型悬臂固定式虹吸器

Rotary Joint & Hard Cantilever Stationary Syphon

平衡式密封设计	*Optimized balanced seal assembly*
多弹簧密封补偿机构	*Multi-spring assembly compensates for axial misalignment*
浮动式密封技术	*Piston absorbs axial misalignment*
全进口浸锑密封包	*Antimony-immersed seal package*
加重式悬臂固定虹吸器	*Hard cantilever stationary syphon*
高强度整体水平护套管	*Support tube strengthens syphon assembly to maintain optimum syphon clearance*
免维护设计	*No maintenance required*
高可靠性、长寿命	*Extended seal life and increased reliability*
适应各类高速宽幅纸机	*For high speed paper machine applications*

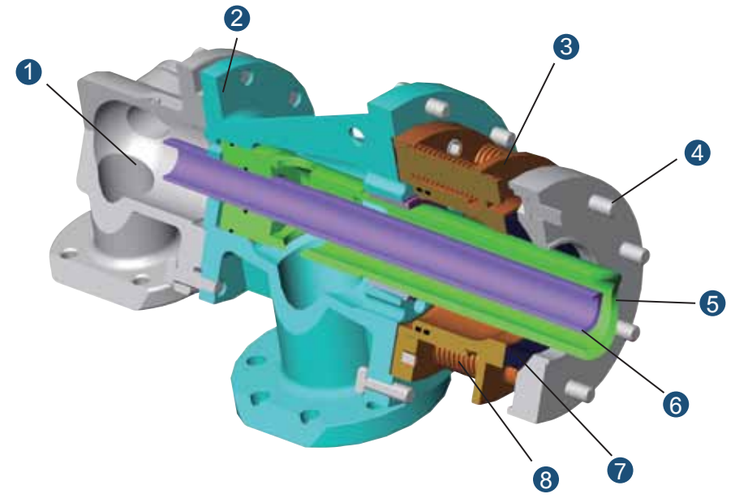

1	弯头	Elbow Head
2	壳体	Body
3	组件	Piston Assembly
4	端盖	Wear Plate
5	水平支撑管	Horizontal Support Pipe
6	虹吸内管	Syphon Pipe
7	密封环	Carbon Seal
8	弹簧	Spring

技术参数

Operating Parameters

最高车速Speed ≤ 2500 MPM / 8202 FPM

最高温度Temperature ≤ 235°C/455 °F

最大压力Pressure ≤ 18 bar /260 psig

适用介质Media：蒸汽 Steam

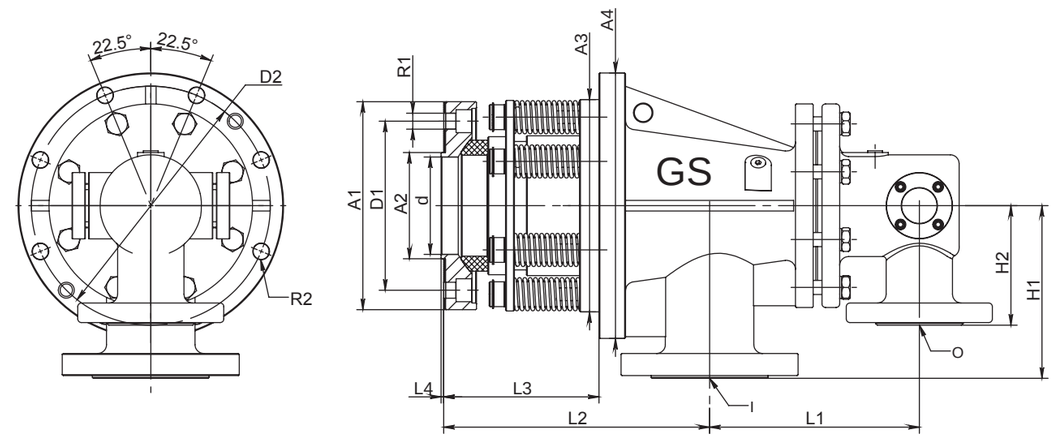

型号 Model	I	O	Φd	ΦA1	ΦA2	ΦA3	ΦA4	ΦD1	ΦD2	H1	H2	L1	L2	L3	L4	R1	R2
GS075 3"	Rc2-1/2"	Rc1-1/2"	90	210	100	240	300	170	270	100	70	167	280	175	3	6-Φ14	8-Φ18
GS100 4"	DN080PN16	DN050PN16	110	235	120	240	300	191	270	195	135	237	300	175	3	8-Φ18	8-Φ18
GS125 5"	DN100PN16	DN065PN16	135	275	150	280	352	235	315	235	180	238	302	175	3	8-Φ18	8-Φ18

注意：随着介质、口径、压力、转速、温度的不同，使用极限也不同，在特殊条件下，请与腾旋科技联系，以确定安全极限。

Note: Maximum limits vary in relation to changes in media,size,rpm,pressure and temperature. Consult Tengxuan for safe limitations under your specific application conditions.

QGX / CSS

旋转接头/悬臂固定式虹吸器
Rotary Joint & Cantilever Stationary Syphon

平衡式密封设计	*Optimized balanced seal assembly*
浮动密封技术	*Piston absorbs axial misalignment*
多弹簧补偿机构	*Multi-spring assembly compensates for axial misalignment*
全进口浸锑密封包	*Antimony-immersed seal package*
悬臂固定虹吸器	*Cantilever stationary syphon*
等强度整体水平管	*Support tube strengthens syphon assembly to maintain optimum syphon clearance*
免维护设计	*No maintenance required*
高可靠性、长寿命	*Extended seal life and increased reliability*
适应各类高中低速纸机	*For high or moderate speed paper machine applications*

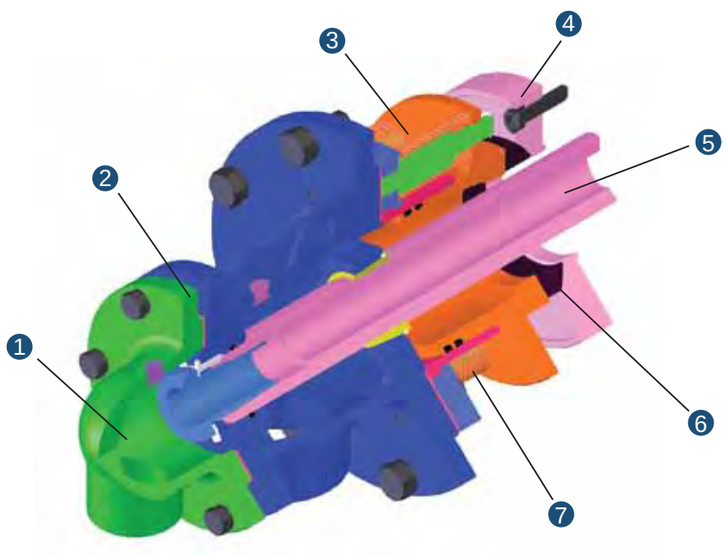

1	弯头	Elbow Head
2	壳体	Body
3	组件	Piston Assembly
4	端盖	Wear Plate
5	水平支撑管	Horizontal Support Pipe
6	密封环	Carbon Seal
7	弹簧	Spring

技术参数
Operating Parameters
最高车速Speed ≤ 800 MPM / 2625 FPM
最高温度Temperature ≤ 235°C/455 °F
最大压力Pressure ≤ 11 bar /160 psig
适用介质Media： 蒸汽 Steam

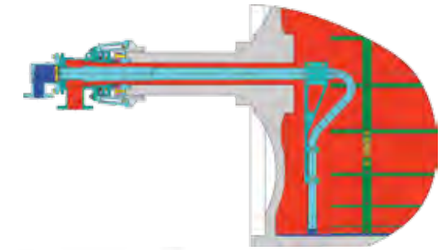

QGX070/075

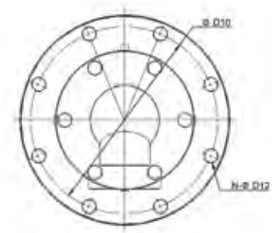

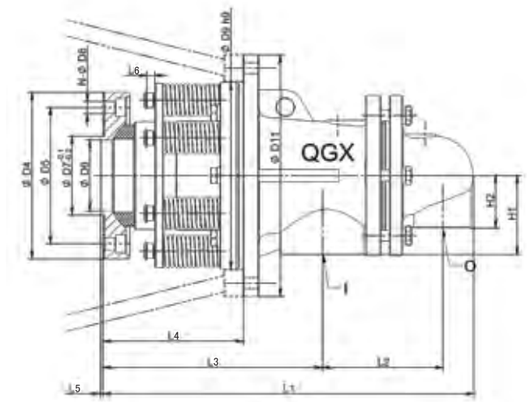

型号 Model	I	O	H1	H2	L1	L2	L3	L4	L5	L6	D4	D5	D6	D7	N-D8	D9	D10	D11	N-D12
QGX070	Rc2"	Rc1-1/4"	90	60	422	137	250	160	3	9	190	155	81	90	6-14	215	245	275	8-18
QGX075	Rc2-1/2"	Rc1-1/2"	90	60	422	137	250	160	3	9	190	155	81	90	6-14	215	245	275	8-18

QGX080/090

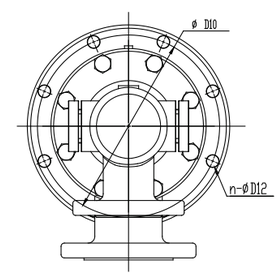

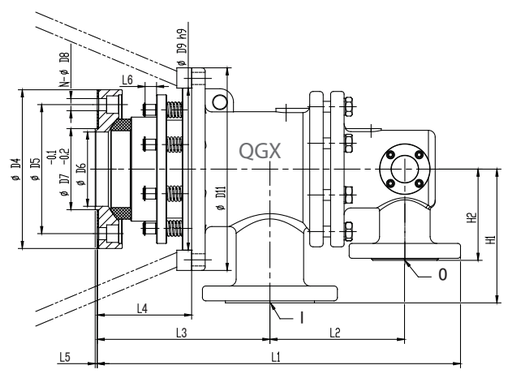

型号Model	I	O	H1	H2	L1	L2	L3	L4	L5	L6	D4	D5	D6	D7	N-D8	D9	D10	D11	n-D12
QGX080	Rc2-1/2"	Rc1-1/2"	100	70	437	149	243	130	3	17	210	170	90	100	6-14	215	245	275	8-18
QGX090	DN80PN16	DN50PN16	198	135	538	200	256	140	3	17	235	191	110	120	8-18	240	270	300	8-18

注意：随着介质、口径、压力、转速、温度的不同，使用极限也不同，在特殊条件下，请与腾旋科技联系，以确定安全极限。
Note: Maximum limits vary in relation to changes in media,size,rpm,pressure and temperature. Consult Tengxuan for safe limitations under your specific application conditions.

SN型旋转接头

SN Rotary Joints

Txuan

www.tengxuan.net

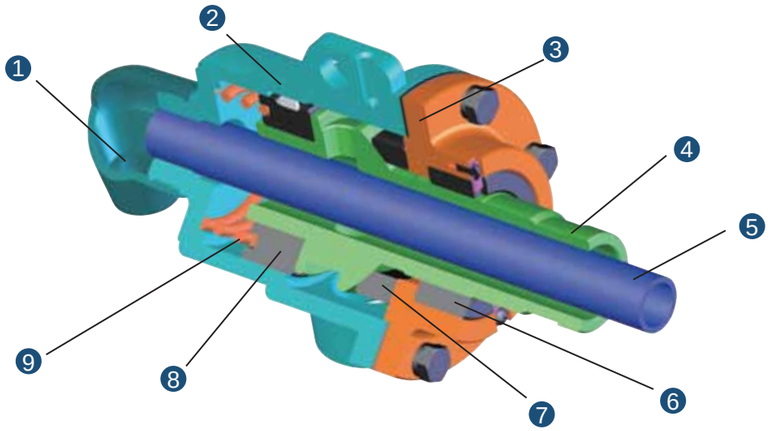

1. 弯头 Elbow
2. 壳体 Body
3. 端盖 Wear Plate
4. 外管 Nipple
5. 虹吸管 Syphon pipe
6. 无油轴承 Carbon Guide
7. 石墨环 Carbon Seal Ring
8. 无油轴承 Carbon Guide
9. 弹簧 Spring

最高转速 Max. Speed	200 RPM (SN020—SN040) 150 RPM (SN050—SN065) 100 RPM (SN080)
最大压力 Max. Pressure	20 bar / 300 psig
最高温度 Max. Temperature	280°C/ 536 °F 超过280°C时，需要定制 (We offer customer designed products beyond 280°C)
适用介质 Media	蒸汽和导热油 Steam , Hot oil
尺寸范围 Sizes	3/4" — 3"

正球面密封设计；
标准锑或碳石墨密封技术；
双无油轴承支撑；
支撑间距最大化；
延长密封寿命，提高可靠性；
易于更换；
旋转式或固定式虹吸器。

Spherical graphite seal design
Standard carbon graphite or antimony seal options
Two internal carbon support guides
Maximum carbon guide separation
Extended seal life and increased reliability
Easy replacement of competitive models
Rotary or stationary syphon compatibility

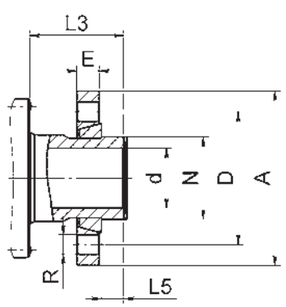

轴头快换法兰尺寸对照表

Quick Release Flanges Type **K**

Nominal Size		Φ A	Φ D	Φ N	E	R	L5
020	3/4"	80	55	26	14	4-Φ 12	11
025	1"	90	65	32.3	14	4-Φ 12	11
032	1-1/4"	100	75	41	16	4-Φ 14	13
040	1-1/2"	115	85	47.5	16	4-Φ 14	13
050	2"	125	95	59	16	4-Φ 14	16
065	2-1/2"	140	110	72	18	4-Φ 14	19
080	3"	160	130	90	20	6-Φ 14	25

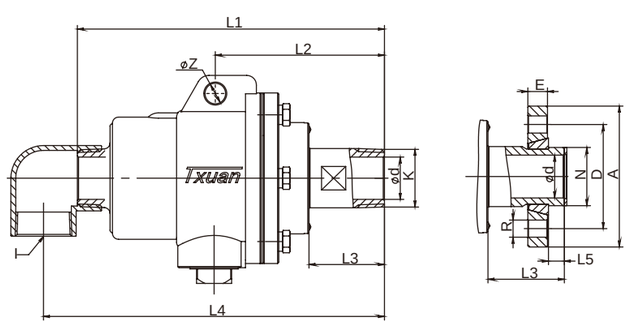

SNM
型旋转接头

单通
MONO FLOW

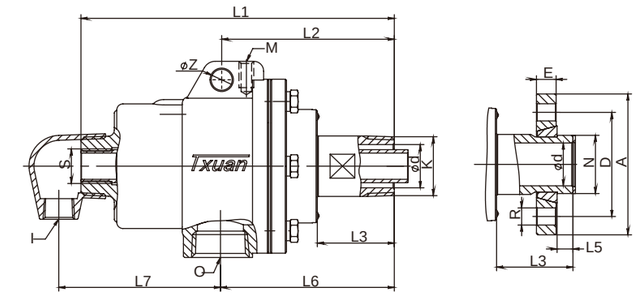

SNS
型旋转接头

双通
固定式虹吸器
DUAL FLOW
STATIONARY SYPHON

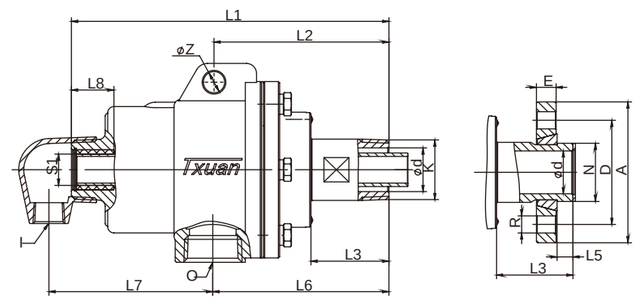

SNR
型旋转接头

双通
旋转式内管
DUAL FLOW
ROTARY INTERNAL PIPE

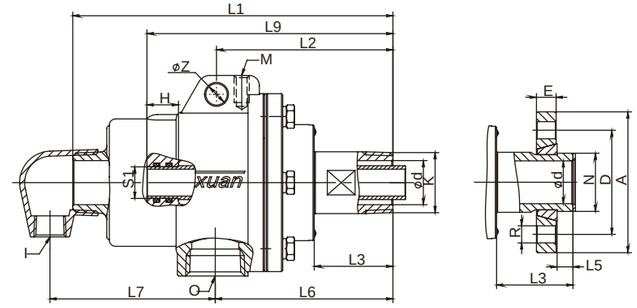

SNRN
型旋转接头

双通
旋转式内管
DUAL FLOW
ROTARY INTERNAL PIPE

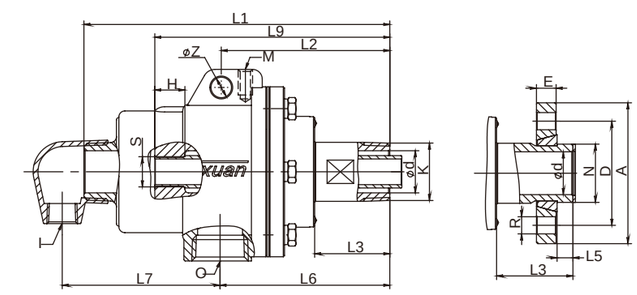

SNRT
型旋转接头

双通
旋转式内管
DUAL FLOW
ROTARY INTERNAL PIPE

型号 model		K(BSPT)	O(BSPT)	I(BSPT) 单通Mono	I(BSPT) 双通Dual	S(BSP)	M	d	Z	L1	L2	L3	L4	L6	L7	L8	L9	H	S1
020	3/4"	R3/4"	Rc3/4"	Rc3/4"	Rc1/2"	G1/4"	M10	16	14	177	106	52	186	97	90	36	-	-	-
025	1"	R1"	Rc3/4"	Rc1"	Rc1/2"	G3/8"	M10	22	14	215	128	52	234	120	106	36	160	20	16
032	1-1/4"	R1-1/4"	Rc1"	Rc1-1/4"	Rc3/4"	G1/2"	M10	29	17	221	129	52	246	122	116	36	167	25	20
040	1-1/2"	R1-1/2"	Rc1-1/4"	Rc1-1/2"	Rc3/4"	G3/4"	M10	35	17	254	140	62	282	141	131	37	195	30	25
050	2"	R2"	Rc1-1/2"	Rc2"	Rc1"	G1"	M12	43	18	287	160	68	319	154	153	43	218	40	32
065	2-1/2"	R2-1/2"	Rc2"	Rc2-1/2"	Rc1-1/4"	G1-1/4"	M12	56	20	324	169	75	363	175	171	54	244	45	40
080	3"	R3"	Rc2-1/2"	Rc3"	Rc1-1/2"	G1-1/2"	-	66	25	-	290	92	508	248	239	50	360	50	48

注意：随着介质、口径、压力、转速、温度的不同，使用极限也不同，在特殊条件下，请与腾旋科技联系，以确定安全极限。
Note: Maximum limits vary in relation to changes in media,size,rpm,pressure and temperature. Consult Tengxuan for safe limitations under your specific application conditions.

SC型旋转接头

SC Rotary Joints

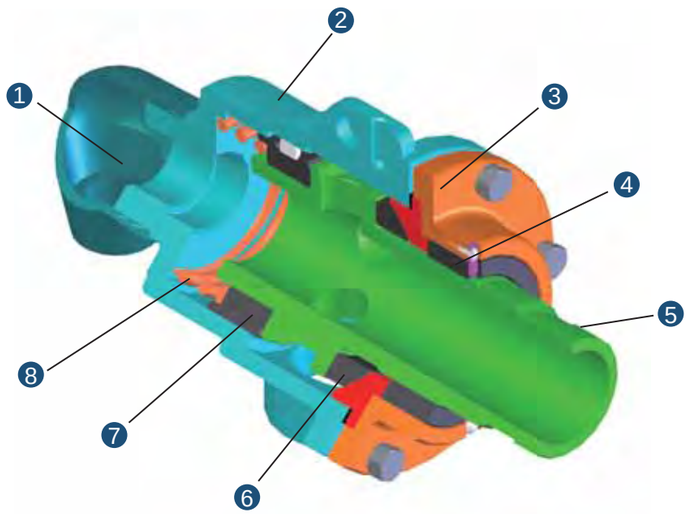

1. 弯头 Elbow
2. 壳体 Body
3. 端盖 Wear Plate
4. 无油轴承 Carbon Guide
5. 外管 Nipple
6. 石墨环 Carbon Seal Ring
7. 无油轴承 Carbon Guide
8. 弹簧 Spring

SCS
SCRN

*Designates a joint head for through-flow service or 90°.

最高车速 Max. Speed	150 RPM (SC080) 100 RPM (SC090/SC100)
最大压力 Max. Pressure	20 bar / 300 psig
最高温度 Max. Temperature	280°C/ 536 °F 超过280°C时，需要定制 (We offer customer designed products beyond 280°C)
适用介质 Media	蒸汽和导热油 Steam，Hot oil
尺寸范围 Sizes	3/4"- 8"

反球面密封设计；
标准锑或碳石墨密封技术；
双无油轴承支撑；
支撑间距最大化；
延长密封寿命，提高可靠性；
易于更换；
旋转式或固定式虹吸器。

Spherical graphite seal design
Standard carbon graphite or antimony seal options
Two internal carbon support guides
Maximum carbon guide separation
Extended seal life and increased reliability
Easy replacement of competitive models
Rotary or stationary syphon compatibility

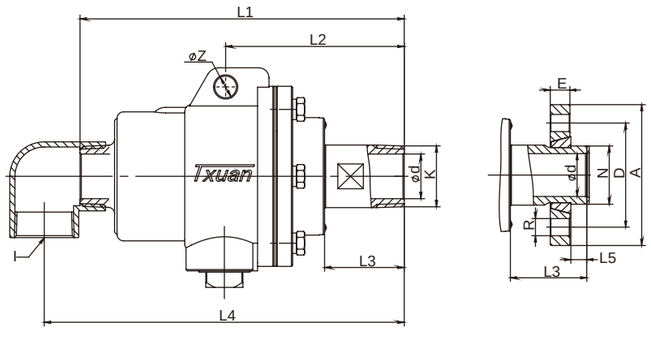

SCM
型旋转接头

单通
MONO FLOW

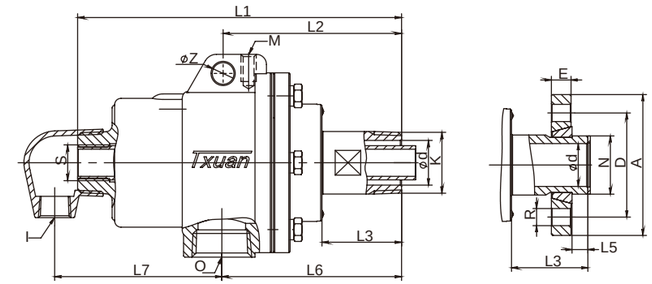

SCS
型旋转接头

双通
固定式内管
DUAL FLOW
STATIONARY INTERNAL PIPE

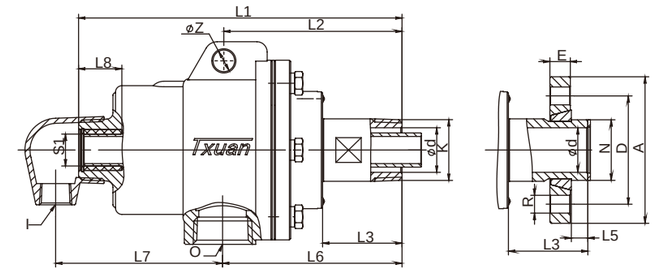

SCR
型旋转接头

双通
旋转式内管
DUAL FLOW
ROTARY INTERNAL PIPE

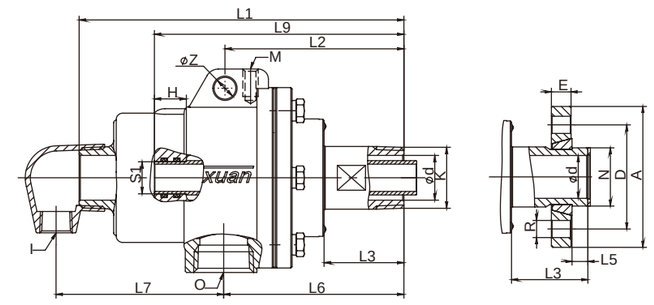

SCRN
型旋转接头

双通
旋转式内管
DUAL FLOW
ROTARY INTERNAL PIPE

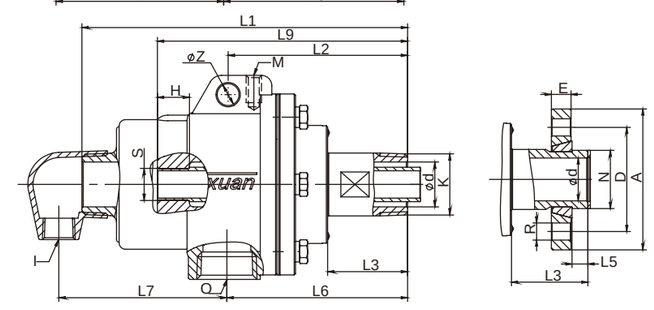

SCRT
型旋转接头

双通
旋转式内管
DUAL FLOW
ROTARY INTERNAL PIPE

型号model	K	O	I 单通 Mono	I 双通 Dual	S(BSP)	M	d	Z	L1	L2	L3	L4	L6	L7	L8	L9	H	S1
020 3/4"	R3/4"	Rc3/4"	Rc3/4"	Rc1/2"	G1/4"	M10	16	14	177	106	52	186	97	90	36	-	-	-
025 1"	R1"	Rc3/4"	Rc1"	Rc1/2"	G3/8"	M10	22	14	215	128	52	234	120	106	36	160	20	16
032 1-1/4"	R1-1/4"	Rc1"	Rc1-1/4"	Rc3/4"	G1/2"	M10	29	17	221	129	52	246	122	116	36	167	25	20
040 1-1/2"	R1-1/2"	Rc1-1/4"	Rc1-1/2"	Rc3/4"	G3/4"	M10	35	17	254	140	62	282	141	131	37	195	30	25
050 2"	R2"	Rc1-1/2"	Rc2"	Rc1"	G1"	M12	43	18	287	160	68	319	154	153	43	218	40	32
065 2-1/2"	R2-1/2"	Rc2"	Rc2-1/2"	Rc1-1/4"	G1-1/4"	M12	56	20	324	169	78	363	178	171	54	244	45	40
080 3"	R3"	Rc2-1/2"	Rc3"	Rc1-1/2"	G1-1/2"	-	66	25	394	290	92	508	248	239	50	349	50	48
090 3-1/2"	R3-1/2"	DN65	Rc3-1/2"	DN50	G2"	-	80	28	567	350	100	570	305	265	-	440	60	60
100 4"	R4"	DN80	Rc4"	DN50	G2"	-	93	28	608	375	96	605	320	285	-	460	60	60
125 5"	R5"	DN100	Rc5"	DN100	G3"	-	125	32	535	270	125	630	320	310	-	445	60	85
150 6"	R6"	DN125	Rc6"	DN125	G4"	-	145	40	560	295	130	705	340	365	-	485	85	105
200 8"	R8"	DN125	Rc8"	DN125	-	-	195	-	1015	-	150	-	630	385	-	770	90	140

注意：随着介质、口径、压力、转速、温度的不同，使用极限也不同，在特殊条件下，请与腾旋科技联系，以确定安全极限。
Note: Maximum limits vary in relation to changes in media,size,rpm,pressure and temperature. Consult Tengxuan for safe limitations under your specific application conditions.

QQ型旋转接头

QQ Rotary Joints

双球面密封；
浸锑密封环；
双杆外支撑结构；
可选旋转虹吸器或固定虹吸器；
高压力、高转速；

Double spherical graphite seal design
Antimony-immersed seal rings
Rod supported
Extended seal life and Increased reliability
Easy replacement of competitive models

最高转速 Max. Speed：	(Model) 40	350 RPM
	(Model) 50-65	250 RPM
	(Model) 80-100	100 RPM
最大压力 Max. Steam Pressure:		18 bar / 260 psig
最高温度 Max. Temperature:		355 °C / 671 °F
适用介质 Media:		蒸汽Steam
尺寸范围 Sizes:		1-1/2"-4"

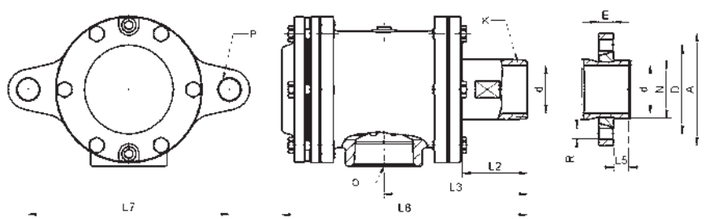

QQM
型旋转接头
单通
MONO FLOW

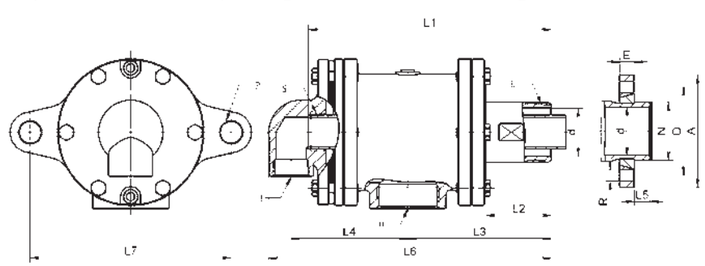

QQS
型旋转接头
双通固定式虹吸器
DUAL FLOW
STATIONARY SYPHON

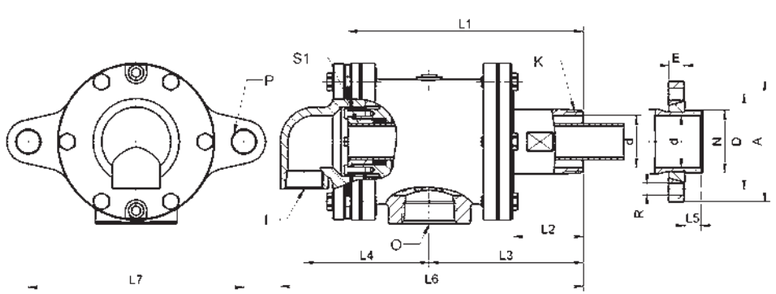

QQR
型旋转接头
双通旋转式虹吸器
DUAL FLOW
ROTARY SYPHON

Model		K	O(BSPT) Mono	O(BSPT) Dual	I(BSPT)	S(BSPT)	Φd	P	L1	L2	L3	L4	L6	L7	L8	ΦS1
QQ040	1-1/2"	1-1/2"	Rc1-1/2"	Rc1-1/4"	Rc3/4"	Rc3/4"	38	21	210	66	130	94	244	206	/	25
QQ050	2"	2"	Rc2"	Rc1-1/2"	Rc1-1/4"	Rc1"	48	27	264	76	156	137	323	250	268	35
QQ065	2-1/2"	2-1/2"	Rc2-1/2"	Rc2"	Rc1-1/4"	Rc1-1/4"	60	27	302	83	178	145	351	250	305	42
QQ080	3"	3"	Rc3"	Rc 2-1/2"	Rc 1-1/2"	Rc1-1/2"	73	33	320	95	195	154	384	290	329	49
QQ100	4"	4"	Rc 4"	Rc 3"	Rc 2"	Rc2"	96	40	420	147	262	239	546	330	425	60

注意：随着介质、口径、压力、转速、温度的不同，使用极限也不同，在特殊条件下，请与腾旋科技联系，以确定安全极限。
Note: Maximum limits vary in relation to changes in media,size,rpm,pressure and temperature. Consult Tengxuan for safe limitations under your specific application conditions.

GSM型旋转接头

GSM Rotary Joints

Txuan
www.tengxuan.net

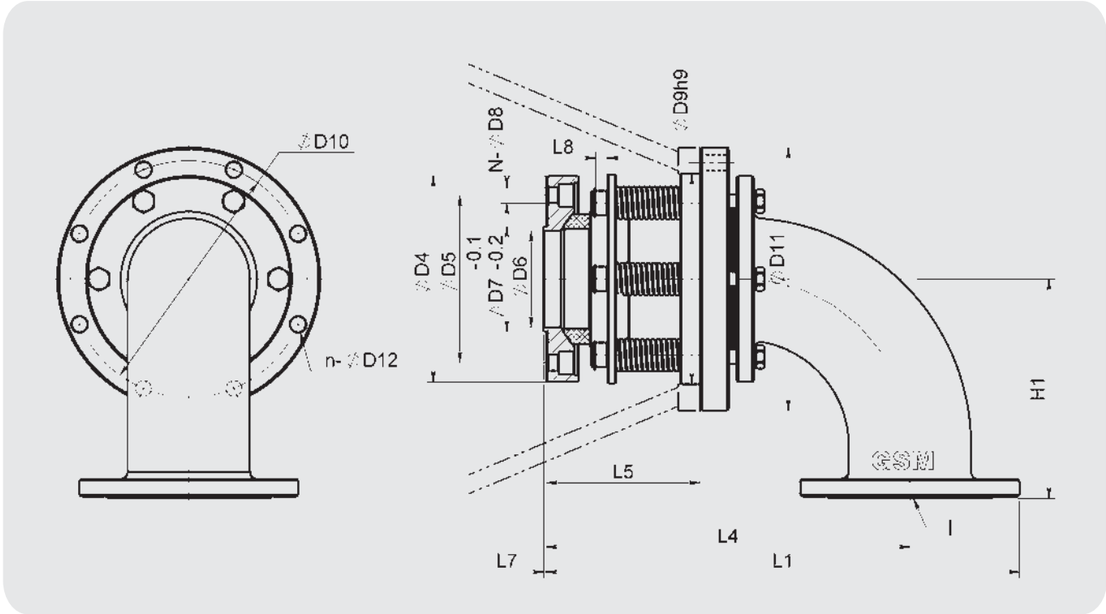

平衡式密封设计	*Optimized balanced seal assembly*
多弹簧密封补偿机构	*Multi-spring assembly compensates for axial misalignment*
浮动式密封技术	*Piston absorbs axial misalignment*
全进口浸锑密封包	*Antimony-immersed seal package*
免维护设计	*No maintenance required*
高可靠性、长寿命	*Extended seal life and increased reliability*
适应各类高速宽幅纸机	*For high speed paper machine applications*

技术参数
Operating Parameters
最高车速Speed ≤ 2500 MPM / 8202 FPM
最高温度Temperature ≤ 235°C/455 °F
最大压力Pressure ≤ 18 bar /260 psig
适用介质Media： 蒸汽 Steam

Model		I	H1	L1	L4	L5	L7	L8	D4	D5	D6	D7	N-D8	D9	D10	D11	n-D12
GSM080	3"	DN80PN16	200	420	320	160	3	9	190	155	81	90	6-Φ14	215	245	275	8-Φ18
GSM100	4"	DN100PN16	200	485	375	175	3	13.5	210	170	90	100	6-Φ14	240	270	300	8-Φ18
GSM125	5"	DN125PN16	250	540	415	175	3	13.5	235	191	110	120	8-Φ18	240	270	300	8-Φ18
GSM150	6"	DN150PN16	300	612.5	470	190	3.5	13.5	285	245	150	160	8-Φ18	300	330	370	8-Φ18

注意：随着介质、口径、压力、转速、温度的不同，使用极限也不同，在特殊条件下，请与腾旋科技联系，以确定安全极限。
Note: Maximum limits vary in relation to changes in media,size,rpm,pressure and temperature. Consult Tengxuan for safe limitations under your specific application conditions.

BE015-BE080

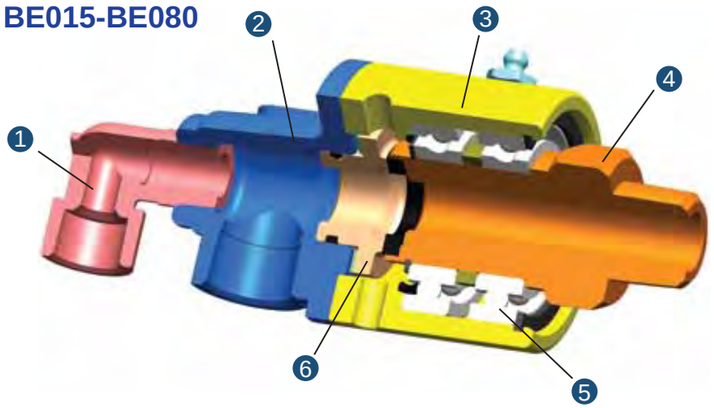

1. 弯头 Elbow
2. 尾盖 Head
3. 壳体 Body
4. 外管 Nipple
5. 轴承 Guide
6. 弹簧 Spring

BE006-BE010

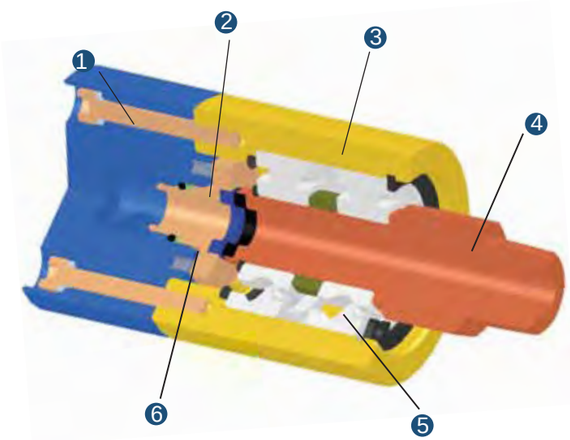

1. 尾盖 Head
2. 弹簧 Spring
3. 壳体 Body
4. 外管 Nipple
5. 轴承 Guide
6. 静环 Carbide Floating Seal

最大水压力: (Max. Water Pressure)	通径(Model) 6 - 40 76 Bar / 1102psig 通径(Model) 50 15 Bar / 217 psig
最大导热油压力: (Max. Hot Oil Pressure)	7 Bar / 100 psig
最高温度: * (Max. Temperature)	120°C / 248°F
*超过 120°C 请联系腾旋 (> 120 °C consult TENGXUAN)	
常用介质(Media):	水 Water，导热油 Hot oil，空气 Air

最高转速: (Max. Speed Rotors with)	通径(Model) 6 - 20	BE	3000 RPM
		BH	1500 RPM
	通径(Model) 25 - 40	BE	2500 RPM
		BH	1250 RPM
	通径(Model) 50	BE	1000 RPM
		BH	500 RPM
	通径(Model) 65 - 80	BE	500 RPM
		BH	250 RPM
常规口径(Sizes):	1/8″ — 3″		

常用密封组合：

C+SIC 适用于清水

C+合金 适用于导热油，蒸汽，热水

TC+SIC 适用于恶劣水质及震动工况

（其它介质工况请咨询腾旋公司）

Seal Combinations - Standard

Carbon Graphite/Ceramic for water

Optional:

Carbon Graphite/Special Metal for hot oil, hot water and saturated Steam

Multi-purpose applications

Seal Combination –For severe conditions

Tungsten Carbide/Ceramic

(max. temperature 90°C)

多弹簧平面密封技术	Springs located outside of flow path
平衡式密封设计	Optimized balanced seal assembly
高精度金属轴承	Precision ball bearing design
整体抗震式设计	Suitable for severe conditions
多种密封组合适应不同工况	Ceramic and carbon graphite seal faces
通用性好、便于互换	General purpose applications
长寿命、高可靠性	Long life and good stability
免维护设计	No maintenance required

轴头快换法兰尺寸对照表

Quick Release Flanges Type **K**

Nominal Size		Φ A	Φ D	Φ N	E	ΦR	L5
015	1/2"	80	55	23	14	4-Φ10	8
020	3/4"	80	55	26	14	4-Φ12	11
025	1"	90	65	32.3	14	4-Φ12	11
032	1-1/4"	100	75	41	16	4-Φ14	13
040	1-1/2"	115	85	47.5	16	4-Φ14	13
050	2"	125	95	59	16	4-Φ14	16
065	2-1/2"	140	110	72	18	4-Φ14	19
080	3"	160	130	90	20	6-Φ14	25

安装尺寸

Mounting Dimensions

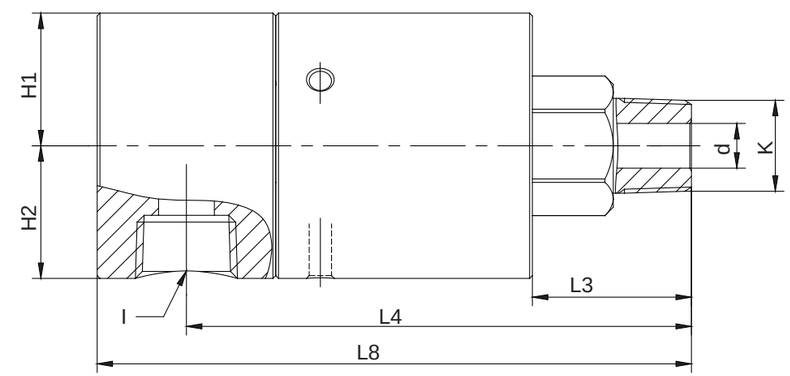

BEM

型旋转接头

单通

MONO FLOW

型号 Model		K(BSPT)	I(BSPT)	Φd	H2	L3	L4	L8
BEM006	1/8 "	R1/8 "	Rc1/8 "	4	23	29	88	102
BEM008	1/4 "	R1/4 "	Rc1/4 "	6	23	29	88	102
BEM010	3/8 "	R3/8 "	Rc3/8 "	10	23	29	88	102

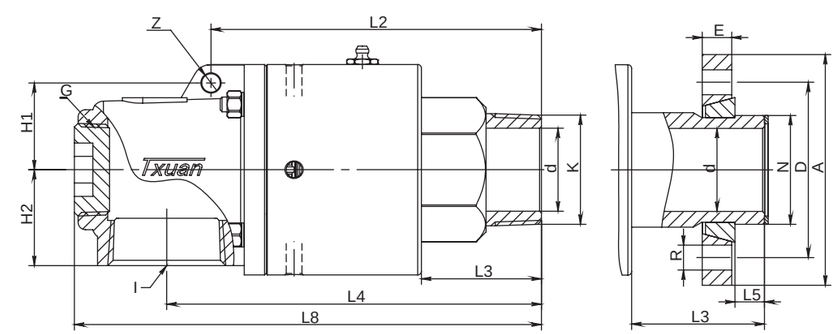

BEM

型旋转接头

单通

MONO FLOW

型号 Model		K(BSPT)	I(BSPT)	ΦZ	Φd	H	H1	H2	L2	L3	L4	L8	G(BSPT)
BEM015	1/2″	R 1/2 ″	Rc 1/2 ″	/	13	15	/	28	/	35	108	162	R c 3/8″
BEM020	3/4″	R 3/4 ″	Rc 3/4 ″	/	16	15	/	30	/	40	125	185	R c 1/2″
BEM025	1″	R 1″	Rc 1″	/	23	18	/	35	/	44	132	198	R c 3/4″
BEM032	1-1/4″	R 1-1/4″	Rc 1-1/4″	/	30	22	/	39	/	54	161	251	R c 1″
BEM040	1-1/2″	R 1-1/2″	Rc 1-1/2 ″	/	36	25	/	38	/	58	172	266	R c 1-1/4″
BEM050	2″	R 2″	Rc 2″	10	45	28	47	45	179	65	203	253	R c 1-1/2″
BEM065	2-1/2″	R 2-1/2″	Rc 2-1/2″	14	60	32	60	72	215	/	346	387	/
BEM080	3″	R 3″	Rc 3″	14	75	32	75	78	280	107	425	454	/

注意：随着介质、口径、压力、转速、温度的不同，使用极限也不同，在特殊条件下，请与腾旋科技联系，以确定安全极限。

Note: Maximum limits vary in relation to changes in media,size,rpm,pressure and temperature. Consult Tengxuan for safe limitations under your specific application conditions.

安装尺寸
Mounting Dimensions

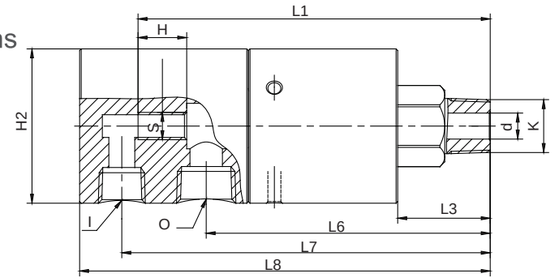

BES010
型旋转接头

双通
固定式内管

DUAL FLOW
STATIONARY INTERNAL PIPE

型号 Model	K(BSPT)	O(BSPT)	I(BSPT)	Φd	H	H2	L1	L3	L6	L7	L8	S(BSP)
BES010 3/8″	R 3/8″	R c 3/8″	R c 1/4″	8	15	22	108	29	88	114	127	G1/16″

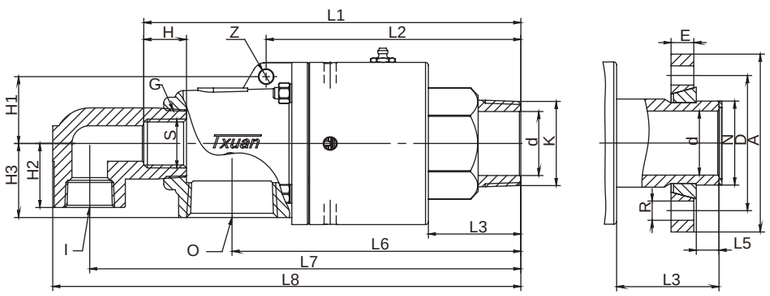

BES
型旋转接头

双通
固定式内管

DUAL FLOW
STATIONARY INTERNAL PIPE

型号 Model	K(BSPT)	O(BSPT)	I(BSPT)	ΦZ	Φd	H	H1	H2	H3	L1	L2	L3	L6	L7	L8	S(BSP)	G(BSPT)
BES015 1/2″	R 1/2″	Rc 1/2″	Rc 1/2″	/	13	15	/	28	28	134	/	35	108	149	162	G1/8″	Rc 3/8″
BES020 3/4″	R 3/4″	Rc 3/4″	Rc 1/2″	/	16	15	/	30	32	155	/	40	125	174	185	G1/4″	Rc 1/2″
BES025 1″	R 1″	Rc 3/4″	Rc 1/2″	/	23	18	/	35	35	168	/	44	132	184	198	G3/8″	Rc 3/4″
BES032 1-1/4″	R 1-1/4″	Rc 1-1/4″	Rc 3/4″	/	30	22	/	39	43	205	/	54	161	233	251	G1/2″	Rc 1″
BES040 1-1/2″	R 1-1/2″	Rc 1-1/2″	Rc 3/4″	/	36	25	/	38	47	220	/	58	172	247	266	G3/4″	Rc 1-1/4″
BES050 2″	R 2″	Rc 1-1/2″	Rc 1″	10	45	28	47	45	52	263	179	65	203	303	329	G1″	Rc 1-1/2″
BES065 2-1/2″	R 2-1/2″	Rc 2″	Rc 1-1/4″	14	60	32	60	72	72	312	215	/	230	329	366	G1-1/4″	/
BES080 3″	R 3″	Rc 2″	Rc 2″	14	75	32	75	72	72	373	280	/	295	410	454	G1-1/2″	/

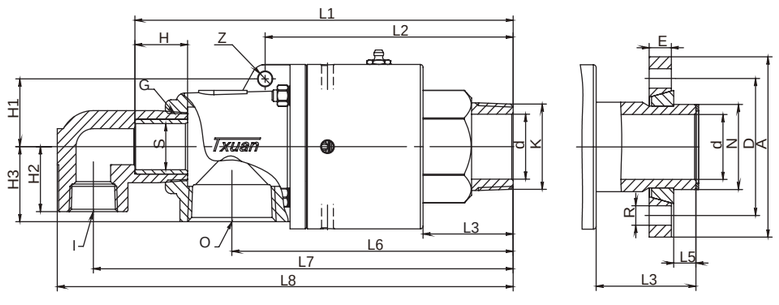

BER
型旋转接头

双通
旋转式内管

DUAL FLOW
ROTARY INTERNAL PIPE

型号 Model	K(BSPT)	O(BSPT)	I(BSPT)	ΦZ	Φd	H	H1	H2	H3	L1	L2	L3	L6	L7	L8	ΦS	G(BSPT)
BER015 1/2″	R 1/2″	Rc 1/2″	Rc 1/2″	/	13	15	/	28	28	134	/	35	108	149	162	10	R c 3/8″
BER020 3/4″	R 3/4″	Rc 3/4″	Rc 1/2″	/	16	15	/	30	32	155	/	40	125	174	185	12	R c 1/2″
BER025 1″	R 1″	Rc 3/4″	Rc 1/2″	/	23	18	/	35	35	168	/	44	132	184	198	16	R c 3/4″
BER032 1-1/4″	R 1-1/4″	Rc 1-1/4″	Rc 3/4″	/	30	22	/	39	43	205	/	54	161	233	251	20	R c 1″
BER040 1-1/2″	R 1-1/2″	Rc 1-1/2″	Rc 3/4″	/	36	25	/	38	47	220	/	58	172	247	266	25	R c 1-1/4″
BER050 2″	R 2″	Rc 1-1/2″	Rc 1″	10	45	28	47	45	52	263	179	65	203	303	329	32	R c 1-1/2″
BER065 2-1/2″	R 2-1/2″	Rc 2″	Rc 1-1/4″	14	60	32	60	72	72	304	215	/	230	329	366	40	/
BER080 3″	R 3″	Rc 2″	Rc 2″	14	75	32	75	72	72	373	280	/	295	410	454	56	/

注意：随着介质、口径、压力、转速、温度的不同，使用极限也不同，在特殊条件下，请与腾旋科技联系，以确定安全极限。
Note: Maximum limits vary in relation to changes in media,size,rpm,pressure and temperature. Consult Tengxuan for safe limitations under your specific application conditions.

视镜 Sight Flow Indicators

视镜是用来观察液体和气体流量的设备。
Sight flow indicators are engineered to provide visual observation of liquid and gas flows.

无视角死点
抗热冲击内衬
预留压差测量接口
Clear viewing port
High temperature / pressure glass
ANSI class flanges available upon request

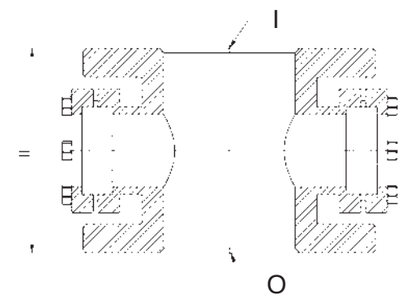

型号 Type	I	O	H
EFS-L020 3/4″	3/4″ BSPT	3/4″ BSPT	100
EFS-L025 1″	1″ BSPT	1″ BSPT	100
EFS-F032 1-1/4″	DN32 PN16	DN32 PN16	160
EFS-F040 1-1/2″	DN40 PN16	DN40 PN16	160
EFS-F050 2″	DN50 PN16	DN50 PN16	160

扰流器 Turbulator Bars

整体结构刚性好
人性化装拆设计
不锈钢材质
提高纸机的烘干能力
Good rigidity and flexibility
Easy installation
Optional in carbon/stainless steel
For machines where condensate rimming occurs

Hoses 金属软管

金属软管是专为旋转接头进、出口连接而设计的，可避免硬管对接头产生拉力和压力。

Hoses have been specifically engineered for use as inlet and outlet connections to rotary joints. Hose prevents pipe strains from creating tension or stress on the rotary joint.

Syphons 虹吸器

高效流通
优化传热传导
使用寿命长
耐腐蚀材料

Smooth condensate flow into syphon pipe
Optimal heat transfer
Long performance life
Corrosion-resistance materials

虹吸器类型 Syphon Type

HPS 虹吸硬管
HPS stationary siphon

SPS 虹吸软管
SPS soft siphon

ELBOW 虹吸弯头
ELBOW stationary siphon

SLSS 弹簧锁紧弯头
SLSS stationary siphon

NRS 旋转式虹吸器
NRS rotary siphon

HRS 旋转式虹吸器
HRS rotary siphon

内管类型 Internal Pipes Type

旋转式内管
rotary internal pipe

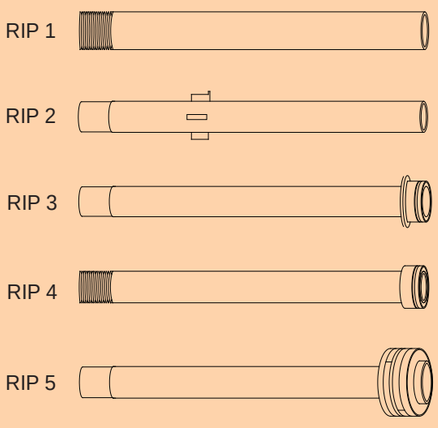

固定式内管
stationary internal pipe

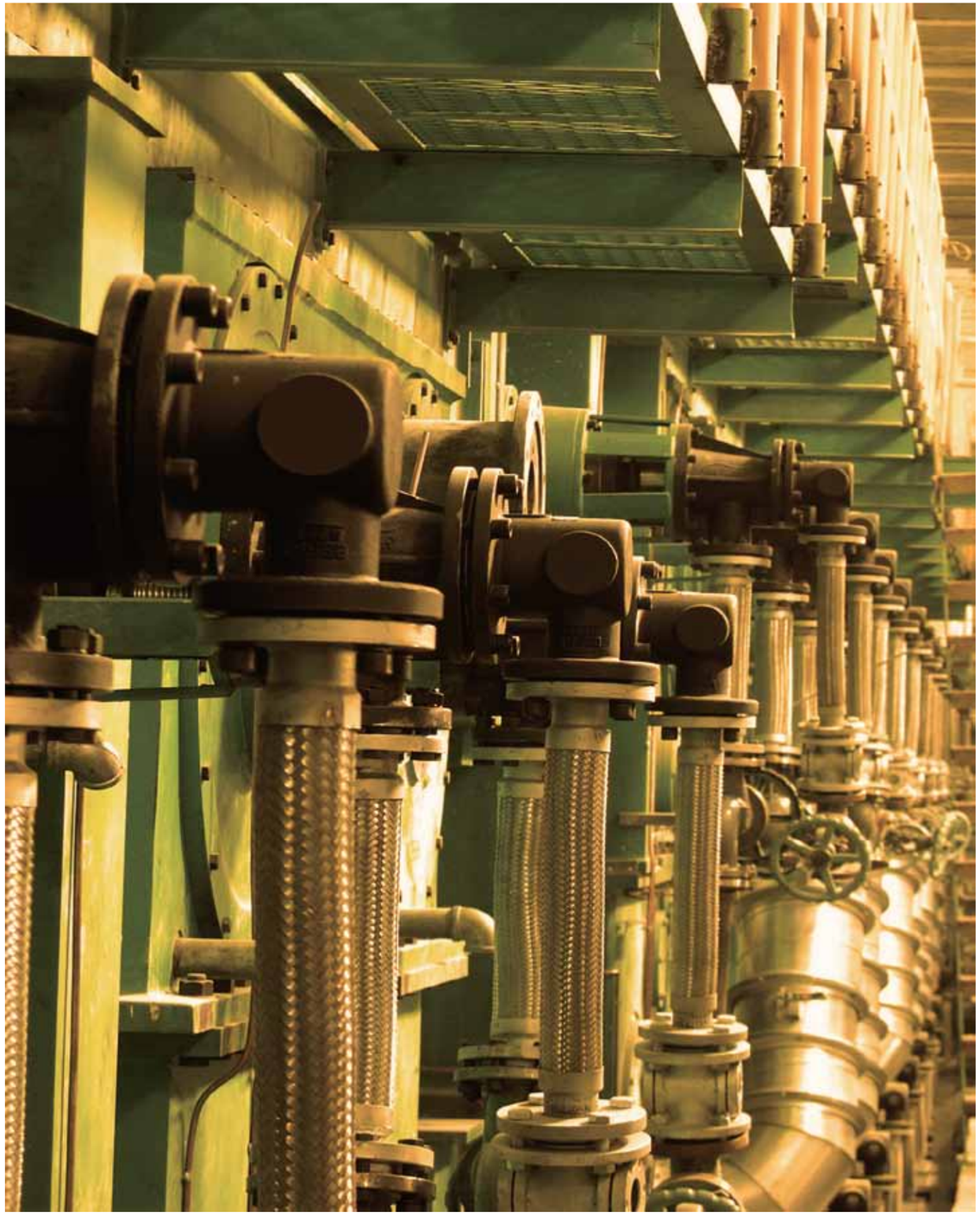

旋转接头	Rotary Joints
关节接头	Swivel Joints
金属软管	Hoses
虹吸器	Syphons
扰流器	Turbulator Bars
纸芯夹头	Core Chucks
移动喷淋执行机构	Shower Oscillator Systems

蒸汽冷凝水系统	Steam & Condensate Systems
造纸涂辅料系统	Paper Coating and Supplementary Materials Systems

本说明书照片资料版权归腾旋公司所有，未经允许不得转载。如有变动恕不通知，请向腾旋公司咨询最新资料。(腾旋市场部)

Product's data and information in the bulletin is only for reference. Such data and information does not represent any type of security or guarantee. Consult Tengxuan Technology for safe limitations under your specific application conditions.
Errors and omissions are inevitable. Technical data will also be changed. The photographs in bulletins are the property of Tengxuan Technology Company and shall not be reproduced without written permission.
(Tengxuan Technology Marketing)

江苏腾旋科技股份有限公司
地址：中国·江苏·无锡市新区梅村工业集中区新都路6号
电话：0510 68787000 88159440
传真：0510 88159405　　邮　编：214112
E-mail: sales@tengxuan.net
网址：www.tengxuan.net

TENGXUAN TECHNOLOGY CO., LTD.
ADD: No.6 Xindu Road, Meicun industrial zone, New district,
Wuxi, Jiangsu. P.R.China　214112
TEL: +86 510 88553417
FAX: +86 510 88159405
E-mail: sales@tengxuan.net
WEB: www.tengxuan.net

XK06-007-00042